APPLICATION FOR EMC DIRECTIVE

On Behalf of

Shenzhen Filmbase Technology Co., Ltd.

LED glass display（Photoelectric glass）

Trade Name: Filmbase

Model: P5, P2, P3, P4, P8, P10, P15, P20, P30, P40

Prepared For : **Shenzhen Filmbase Technology Co., Ltd.**
3103/31F, 3A Building,Smart Park,Baolong,Longgang,Shenzhen ,China

Prepared By : **TMC Testing Services(Shenzhen) Co., Ltd.**

1/F., Block A, Xinshidai Gongrong Industrial Park, No. 2, Shihuan Road, S hilong Community, Shiyan Street, Baoan District, Shenzhen, China

Tel: +86-755- 86642861
Web: www.tmc-lab.com
E-mail：Cert@tmc-lab.com

Date of Test : June 09, 2022-June 14, 2022
Date of Report : August 10, 2022
Report Number : TMC220608107-E

TABLE OF CONTENTS

TEST REPORT DECLARATION **5**
1. TEST RESULTS SUMMARY **6**
2. GENERAL INFORMATION **7**
2.1. Report information 7
2.2. Description of Test Facility and Measurement Uncertainty 7
3. PRODUCT DESCRIPTION **8**
3.1. EUT Description 8
3.2. Block Diagram of EUT Configuration 8
3.3. Operating Condition of EUT 8
3.4. Test Conditions 8
3.5. Modifications 8
3.6. Abbreviations 9
3.7. Performance Criterion 9
4. TEST EQUIPMENT USED **10**
4.1. For Conducted Emission Test 10
4.2. For Radiated Emission Measurement 10
4.3. For Harmonic / Flicker Test 10
4.4. For Electrostatic Discharge Immunity Test 10
4.5. For RF Strength Susceptibility Test 10
4.6. For Electrical Fast Transient/Burst Immunity Test 11
4.7. For Surge Test 11
4.8. For Injected Currents Susceptibility Test 11
4.9. For Magnetic Field Immunity Test 11
4.10. For Voltage Dips and Interruptions Test 11
5. POWER LINE CONDUCTED EMISSION TEST **12**
5.1. Block Diagram of Test Setup 12
5.2. Test Standard 12
5.3. Power Line Conducted Emission Limit 12
5.4. EUT Configuration on Test 12
5.5. Operating Condition of EUT 12
5.6. Test Procedure 13
5.7. Test Result 13
6. RADIATED EMISSION TEST **14**
6.1. Open Site Setup Diagram 14
6.2. Test Standard 14
6.3. Radiated Emission Limit 14
6.4. EUT Configuration on Test 14
6.5. Operating Condition of EUT 15
6.6. Test Procedure 15
6.7. Test Results 15
7. HARMONIC CURRENT EMISSION TEST **16**
7.1. Block Diagram of Test Setup 16
7.2. Test Standard and Limit 16
7.3. Test Procedure 17
7.4. Test Results 17
8. VOLTAGE FLUCTUATIONS & FLICKER TEST **18**
8.1. Block Diagram of Test Setup 18
8.2. Test Standard 18

8.3. Operating Condition of EUT 18
8.4. Test Data 18
8.5. Test Results 18
9. ELECTROSTATIC DISCHARGE TEST 19
9.1. Block Diagram of ESD Test Setup 19
9.2. Test Standard 19
9.3. Severity Levels and Performance Criterion 19
9.4. EUT Configuration on Test 19
9.5. Operating Condition of EUT 19
9.6. Test Procedure 20
9.7. Test Results 20
10. RF FIELD STRENGTH SUSCEPTIBILITY TEST 22
10.1. R/S Test Setup 22
10.2. Test Standard 22
10.3. Severity Levels and Performance Criterion 22
10.4. EUT Configuration on Test 23
10.5. Operating Condition of EUT 23
10.6. Test Procedure 23
10.7. Test Results 23
11. ELECTRICAL FAST TRANSIENT/BURST TEST 25
11.1. EFT Test Setup 25
11.2. Test Standard 25
11.3. Severity Levels and Performance Criterion 25
11.4. EUT Configuration on Test 25
11.5. Operating Condition of EUT 25
11.6. Test Procedure 26
11.7. Test Results 26
12. SURGE TEST 28
12.1. Surge Test Setup 28
12.2. Test Standard 28
12.3. Severity Levels and Performance Criterion 28
12.4. EUT Configuration on Test 28
12.5. Operating Condition of EUT 28
12.6. Test Procedure 29
12.7. Test Results 29
13. INJECTED CURRENTS SUSCEPTIBILITY TEST 31
13.1. Block Diagram of Test AC Mains Setup 31
13.2. Test Standard 31
13.3. Severity Levels and Performance Criterion 31
13.4. EUT Configuration on Test 31
13.5. Operating Condition of EUT 31
13.6. Test Procedure 32
13.7. Test Results 32
14. VOLTAGE DIPS AND INTERRUPTIONS TEST 34
14.1. Voltage Dips and Interruptions Test Setup 34
14.2. Test Standard 34
14.3. Severity Levels and Performance Criterion 34
14.4. EUT Configuration on Test 34
14.5. Operating Condition of EUT 34
14.6. Test Procedure 35
14.7. Test Result 35

APPENDIX I **37**
APPENDIX Ⅱ **40**
APPENDIX Ⅲ **43**

TEST REPORT DECLARATION

Applicant	:	Shenzhen Filmbase Technology Co., Ltd.
Address	:	3103/31F, 3A Building,Smart Park, Baolong, Longgang, Shenzhen , China
EUT Description	:	LED glass display（Photoelectric glass）
Model Number	:	P5, P2, P3, P4, P8, P10, P15, P20, P30, P40

Test Standards:

EN 55032:2015+A11:2020
EN IEC 61000-3-2:2019+A1:2021
EN 61000-3-3:2013+A1:2019
EN 55035:2017+A11:2020

The EUT described above is tested by TMC Testing Services(Shenzhen) Co., Ltd. EMC Laboratory to determine the maximum emissions from the EUT and ensure the EUT to be compliance with the immunity requirements of the EUT. TMC Testing Services(Shenzhen) Co., Ltd. EMC Laboratory is assumed full responsibility for the accuracy of the test results. Also, this report shows that the EUT technically complies with the 2014/30/EU directive and its amendment requirements.

The test report is valid for above tested sample only and shall not be reproduced in part without written approval of the laboratory.

Prepared by : Peishuang Wu

Peishuang Wu/Engineer

Approved & Authorized Signer :

Vivian Jiang/Manager

1. TEST RESULTS SUMMARY

Table 1 Test Results Summary

Test Items	Test Results
Power Line Conducted Emission Test	PASS
Radiated Emission Test	PASS
Harmonic Current Emission Test	N/A
Voltage Fluctuations & Flicker Test	PASS
Electrostatic Discharge Test	PASS
RF Field Strength Susceptibility Test	PASS
Electrical Fast Transient/Burst Test	PASS
Surge Test	PASS
Injected Currents Susceptibility Test	PASS
Voltage Dips And Interruptions Test	PASS

2. GENERAL INFORMATION

2.1. Report information

2.1.1. This report is not a certificate of quality; it only applies to the sample of the specific product/equipment given at the time of its testing. The results are not used to indicate or imply that they are application to the similar items. In addition, such results must not be used to indicate or imply that TMC approves recommends or endorses the manufacture, supplier or use of such product/equipment, or that TMC in any way guarantees the later performance of the product/equipment.

2.1.2. The sample/s mentioned in this report is/are supplied by Applicant, TMC therefore assumes no responsibility for the accuracy of information on the brand name, model number, origin of manufacture or any information supplied.

2.1.3. Additional copies of the report are available to the Applicant at an additional fee. No third part can obtain a copy of this report through TMC, unless the applicant has authorized TMC in writing to do so.

2.2. Description of Test Facility and Measurement Uncertainty

Where relevant, the following measurement uncertainty levels have been estimated for tests performed on the EUT as specified in CISPR 16-4-2.

Measurement	Frequency		Uncertainty
Conducted emissions	9kHz-30MHz		+/- 3.59dB
Radiated emissions	Horizontal	30MHz~230MHz	+/-4.77 dB
		230MHz~300MHz	+/-4.93 dB
	Vertical	30MHz~230MHz	+/-5.04 dB
		230MHz~300MHz	+/-4.93 dB

This uncertainty represents an expanded uncertainty expressed at approximately the 95% confidence level using a coverage factor of k=2.

3. PRODUCT DESCRIPTION

3.1. EUT Description

Description	:	LED glass display（Photoelectric glass）
Applicant	:	Shenzhen Filmbase Technology Co., Ltd. 3103/31F, 3A Building,Smart Park, Baolong, Longgang, Shenzhen , China
Manufacturer	:	Shenzhen Yuguang new material co., LTD 202, 2/F, 3 Buliding, Huangqiang Logistics Park, No.43, Qingfeng Avenue, Longgang District, Shenzhen, China
Model Number	:	P5

3.2. Block Diagram of EUT Configuration

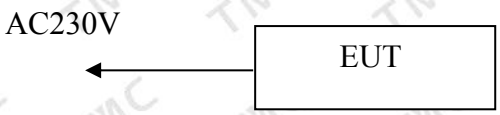

3.3. Operating Condition of EUT

Test mode 1: ON

3.4. Test Conditions

Temperature: 23-26℃
Relative Humidity: 55-68 %

3.5. Modifications

No modification was made.

3.6. Abbreviations

AC	Alternating Current
AMN	Artificial Mains Network
DC	Direct Current
EM	ElectroMagnetic
EMC	ElectroMagnetic Compatibility
EUT	Equipment Under Test
IF	Intermediate Frequency
RF	Radio Frequency
rms	root mean square
EMI	Electromagnetic Interference
EMS	Electromagnetic Susceptibility

3.7. Performance Criterion

Criterion A: The equipment shall continue to operate as intended without operator intervention. No degradation of performance of loss of function is allowed below a performance level specified by the manufacturer when the equipment is used as intended.

Criterion B: After the test, the equipment shall continue to operate as intended without operator intervention. No degradation of performance or loss of function is allowed, after the application of the phenomena below a performance level specified by the manufacturer, when the equipment is used as intended.

Criterion C: Loss of function is allowed, provided the function is self-recoverable, or can be restored by the operation of the controls by the user in accordance with the manufacturer's instructions.

4. TEST EQUIPMENT USED

4.1. For Conducted Emission Test

Item	Equipment	Manufacturer	Model No.	Serial No.	Last Cal.	Cal. Interval
1.	Test Receiver	Rohde & Schwarz	ESHS30	828985/018	Jun.01,22	1 Year
2.	Pulse Limiter	Rohde & Schwarz	ESH3-Z2	100006	Jun.01,22	1 Year
3.	L.I.S.N.	Rohde & Schwarz	ESH2-Z5	834549/005	Jun.01,22	1 Year
4.	Conical	Emtek	N/A	N/A	N/A	N/A
5.	Voltage Probe	Schwarzbeck	TK9416	N/A	Jun.01,22	1 Year
6.	Coaxial Switch	Anritsu	MM1859B	6100214550	Jun.01,22	1 Year

4.2. For Radiated Emission Measurement

Item	Equipment	Manufacturer	Model No.	Serial No.	Last Cal.	Cal. Interval
1.	Spectrum Analyzer	ANRITSU	MS2661C	6200140915	Jun.01,22	1 Year
2.	Test Receiver	Rohde&Schwarz	ESC830	828982/018	Jun.01,22	1 Year
3.	Bilog Antenna	Schwarzbeck	VULB9163	142	Jun.01,22	1 Year
4.	50 Coaxial Switch	Anritsu Corp	MM1859B	6100237248	Jun.01,22	1 Year
5.	Cable	Schwarzbeck	AK9513	ACRX1	Jun.01,22	1 Year
6.	Cable	Rosenberger	N/A	FR2RX2	Jun.01,22	1 Year
7.	Cable	Schwarzbeck	AK9513	CRRX2	Jun.01,22	1 Year
8.	Cable	Schwarzbeck	AK9513	CRRX2	Jun.01,22	1 Year
9.	Signal Generator	HP	864A	3625U00573	Jun.01,22	1 Year

4.3. For Harmonic / Flicker Test

Item	Equipment	Manufacturer	Model No.	Serial No.	Last Cal.	Cal. Interval
1.	Power Frequency test system	HAEFELY	PHF555	080419-03	Jun.01,22	1 Year

4.4. For Electrostatic Discharge Immunity Test

Item	Equipment	Manufacturer	Model No.	Serial No.	Last Cal.	Cal. Interval
1.	ESD Tester	HAEFELY	PSD 1600	H911’292	Jun.01,22	1 Year

4.5. For RF Strength Susceptibility Test

Item	Equipment	Manufacturer	Model No.	Serial No.	Last Cal.	Cal. Interval
1.	Signal Generator	HP	8648A	3633A02081	Jun.01,22	1 Year
2.	MIXER	A&R	500A100	17034	NCR	NCR
3.	MIXER	A&R	100W/1000M1	17028	NCR	NCR
4.	Isotropic Field Monitor	A&R	FM2000	16829	NCR	NCR
5.	Isotropic Field Probe	A&R	FLW220100	16755	Jun.01,22	1 Year
6.	Biconic Antenna	EMCO	3108	9507-2534	NCR	NCR
7.	Log-periodic Antenna	A&R	AT1080	16812	NCR	NCR
8.	PC	N/A	486DX2	N/A	N/A	N/A

4.6. For Electrical Fast Transient/Burst Immunity Test

Item	Equipment	Manufacturer	Model No.	Serial No.	Last Cal.	Cal. Interval
1.	Burst Tester	HAEFELY	PEFT 4010	080981-16	Jun.01,22	1 Year

4.7. For Surge Test

Item	Equipment	Manufacturer	Model No.	Serial No.	Last Cal.	Cal. Interval
1.	Surge Tester	HAEFELY	PSURGE4.1	080107-04	Jun.01,22	1 Year

4.8. For Injected Currents Susceptibility Test

Item	Equipment	Manufacturer	Model No.	Serial No.	Last Cal.	Cal. Interval
1.	Simulator	EMTEST	CWS 500C	0900-12	Jun.01,22	1 Year
2.	CDN	EMTEST	CDN-M2	510010010010	Jun.01,22	1 Year
3.	VDN	EMTEST	CDN-M3	0900-11	Jun.01,22	1 Year
4.	Injection Clamp	EMTEST	F-2031-23MM	368	Jun.01,22	1 Year
5.	Attenuator	EMTEST	ATT6	0010222a	Jun.01,22	1 Year

4.9. For Magnetic Field Immunity Test

Item	Equipment	Manufacturer	Model No.	Serial No.	Last Cal.	Cal. Interval
1.	Magnetic Field Tester	HEAFELY	MAG100.1	083858-10	Jun.01,22	1 Year

4.10. For Voltage Dips and Interruptions Test

Item	Equipment	Manufacturer	Model No.	Serial No.	Last Cal.	Cal. Interval
2.	Dips Tester	HEAFELY	PLINE 1610	083732-18	Jun.01,22	1 Year

5. POWER LINE CONDUCTED EMISSION TEST

5.1. Block Diagram of Test Setup

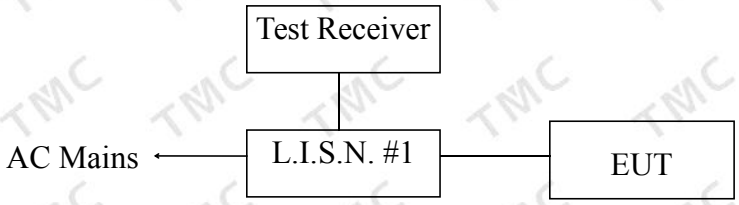

5.2. Test Standard

EN 55032:2015+A11:2020

5.3. Power Line Conducted Emission Limit

Frequency MHz	Limits dB(μV)	
	Quasi-peak Level	Average Level
0.15 ~ 0.50	66 ~ 56*	56 ~ 46*
0.50 ~ 5.00	56	46
5.00 ~ 30.00	60	50

Notes: 1. *Decreasing linearly with logarithm of frequency.
2. The lower limit shall apply at the transition frequencies.

5.4. EUT Configuration on Test

The following equipments are installed on conducted emission test to meet EN55032 requirement and operating in a manner, which tends to maximize its emission characteristics in a normal application.

5.4.1. EUT Information

Model Number: P5
Manufacturer: Shenzhen Yuguang new material co., LTD

5.5. Operating Condition of EUT

5.5.1. Setup the EUT and simulators as shown in Section 5.1.

5.5.2. Turn on the power of all equipments.

5.5.3. Let the EUT work in test modes (ON) and test it.

5.6. Test Procedure

The EUT is put on the ground and connected to the AC mains through a Artificial Mains Network (AMN). This provided 50ohm-coupling impedance for the tested equipments. Both sides of AC line are checked to find out the maximum conducted emission levels according to the EN55022 regulations during conducted emission test.

The bandwidth of the test receiver (R&S Test Receiver ESHS30) is set at 10KHz. and all the scanning waveform is put in
Appendix I.

5.7. Test Result

PASS.

6. RADIATED EMISSION TEST

6.1. Open Site Setup Diagram

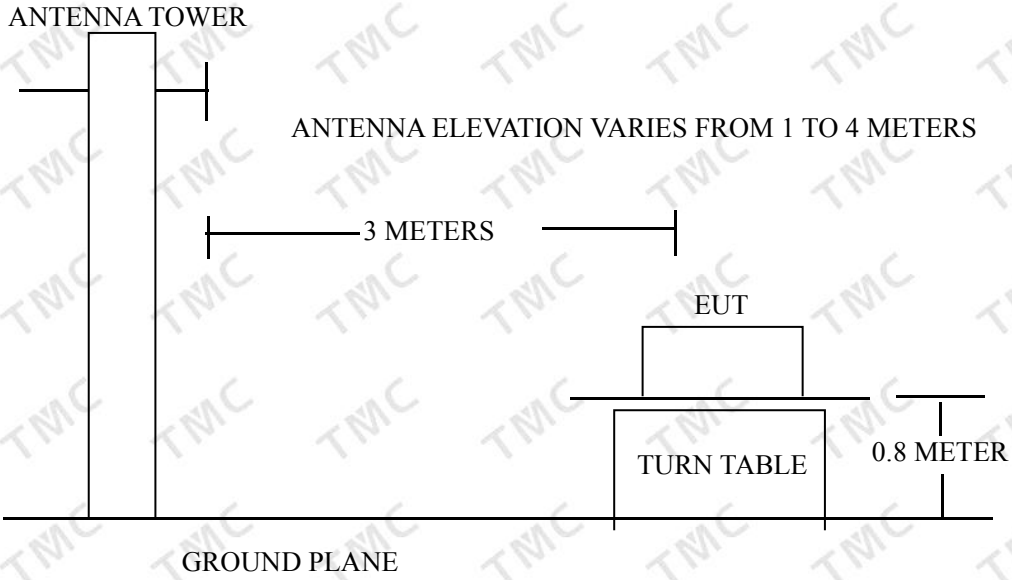

6.2. Test Standard

EN 55032:2015+A11:2020

6.3. Radiated Emission Limit

All emanations from a Class B computing devices or system, including any network of conductors and apparatus connected thereto, shall not exceed the level of field strengths specified below:

FREQUENCY (MHz)	DISTANCE (Meters)	FIELD STRENGTHS LIMITS (dBμV/m)
30 ~ 230	3	40
230 ~ 1000	3	47

Note:(1) The tighter limit shall apply at the edge between two frequency bands.
(2) Distance refers to the distance in meters between the measuring instruments antenna and the closed point of any part of the EUT.

6.4. EUT Configuration on Test

The EN55032 Class B regulations test method must be used to find the maximum emission during radiated emission test.

6.5. Operating Condition of EUT

6.5.1. Setup the EUT as shown on Section 6.1.

6.5.2. Turn on the power of all equipments.

6.5.3. Let the EUT work in test mode and measure it.

6.6. Test Procedure

The EUT is placed on a turn table which is 0.8 meter above ground. The turn table can rotate 360 degrees to determine the position of the maximum emission level. The EUT is set 3 meters away from the receiving antenna which is mounted on a antenna tower. The antenna can move up and down between 1 to 4 meters to find out the maximum emission level. Broadband antenna (calibrated by dipole antenna) are used as a receiving antenna. Both horizontal and vertical polarization of the antenna are set on test.

The bandwidth setting on the test receiver (R&S TEST RECEIVER ESCS20) is 120 KHz. The EUT is tested in Anechoic Chamber. and all the scanning waveform is put in **Appendix II.**

6.7. Test Results

PASS.

7. HARMONIC CURRENT EMISSION TEST

7.1. Block Diagram of Test Setup

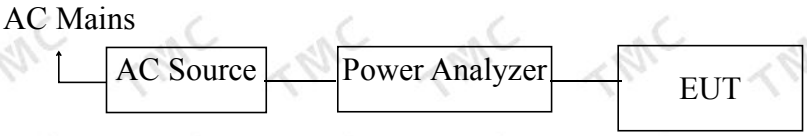

7.2. Test Standard and Limit

7.2.1. Test Standard

EN IEC 61000-3-2: 2019+A1:2021

7.2.2. Limits

Table 12 Harmonic Current Test Limit (Class A)

Harmonic order (**n**)	Maximum permissible harmonic current (A)
Odd harmonics	
3	2.30
5	1.14
7	0.77
9	0.40
11	0.33
13	0.21
15≤n≤39	0.15×15/**n**
Even harmonics	
2	1.08
4	0.43
6	0.30
8≤n≤40	0.23×8/**n**

7.3. Test Procedure

The power cord of the EUT is connected to the output of the test system. Turn on the Power of the EUT and use the test system to test the harmonic current level.

7.4. Test Results

N/A

8. VOLTAGE FLUCTUATIONS & FLICKER TEST

8.1. Block Diagram of Test Setup

Same as Section 7.1.

8.2. Test Standard

EN 61000-3-3:2013+A1:2019

8.3. Operating Condition of EUT

Same as Section7.3.. The power cord of the EUT is connected to the output of the test system. Turn on the power of the EUT and use the test system to test the harmonic current level.

Flicker Test Limit

Test items	Limits
Pst	1.0
dc	3.3%
dmax	4.0%
dt	Not exceed 3.3% for 500ms

8.4. Test Data

Flicker test Data

Model No.: P5 Test Mode: 1		
Items	Reading	Limit
dmax	0.02	4.0%
dc	0.03	3.3%
dt	0.05	Not exceed 3.3% for 500ms
Pst	0.001	1.0

8.5. Test Results

PASS.

9. ELECTROSTATIC DISCHARGE TEST

9.1. Block Diagram of ESD Test Setup

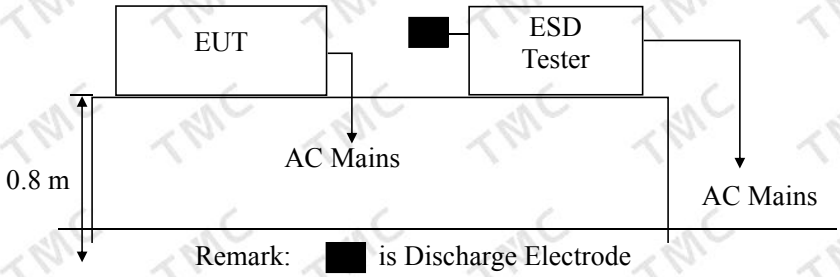

9.2. Test Standard

EN 55035:2017+A11:2020
Severity Level 3 for Air Discharge at 8KV
Severity Level 2 for Contact Discharge at 4KV

9.3. Severity Levels and Performance Criterion

9.3.1. Severity level

Level	Test Voltage Contact Discharge (KV)	Test Voltage Air Discharge (KV)
1.	2	2
2.	4	4
3.	6	8
4.	8	15
X.	Special	Special

9.3.2. Performance criterion: B

9.4. EUT Configuration on Test

The configuration of EUT is listed in Section 3.2.

9.5. Operating Condition of EUT

9.5.1. Setup the EUT as shown in Section 9.1.

9.5.2. Turn on the power of all equipments.

9.5.3. Let the EUT work in test mode (ON) and test it.

9.6. Test Procedure

9.6.1. Air Discharge:

This test is done on non-conductive surfaces. The round discharge tip of the discharge electrode shall be approached as fast as possible to touch the EUT.
After each discharge, the discharge electrode shall be removed from the EUT.
The generator is then re-triggered for a new single discharge and repeated 10 times for each pre-selected test point. This procedure shall be repeated until all the air discharge completed.

9.6.2. Contact Discharge:

All the procedure shall be same as Section 9.6.1. except that the tip of the discharge electrode shall touch the EUT before the discharge switch is operated.

9.6.3. Indirect discharge for horizontal coupling plane

At least 20 single discharges shall be applied to the horizontal coupling plane, at points on each side of the EUT. The discharge electrode positions vertically at a distance of 0.1m from the EUT and with the discharge electrode touching the coupling plane.

9.6.4. Indirect discharge for vertical coupling plane

At least 20 single discharge shall be applied to the center of one vertical edge of the coupling plane. The coupling plane, of dimensions 0.5m X 0.5m, is placed parallel to, and positioned at a distance of 0.1m from the EUT. Discharges shall be applied to the coupling plane, with this plane in sufficient different positions that the four faces of the EUT are completely illuminated.

9.7. Test Results

PASS.

Please refer to the following page.

Electrostatic Discharge Test Results

TMC Testing Services(Shenzhen) Co., Ltd.

Date: August 10, 2022

Applicant :	Shenzhen Filmbase Technology Co., Ltd.	Test Date :	June 14, 2022
EUT:	LED glass display（Photoelectric glass）	Temperature :	22 ℃
M/N :	P5	Humidity :	50％
Power Supply :	AC 230V/50Hz	Test Mode :	ON
Test Engineer :	Jason		

Air Discharge: ±8KV For each point positive 10 times and negative 10 times discharge.

Contact Discharge: ±4KV

Location		Kind A-Air Discharge C-Contact Discharge	Result
Slots	6 points	A	PASS
Ports	2points	C	PASS
HCP	8 points	C	PASS
VCP	8 points	C	PASS

Discharge should be considered on Contact and Air and Horizontal Coupling Plane (HCP) and Vertical Coupling Plane (VCP).

10. RF FIELD STRENGTH SUSCEPTIBILITY TEST

10.1. R/S Test Setup

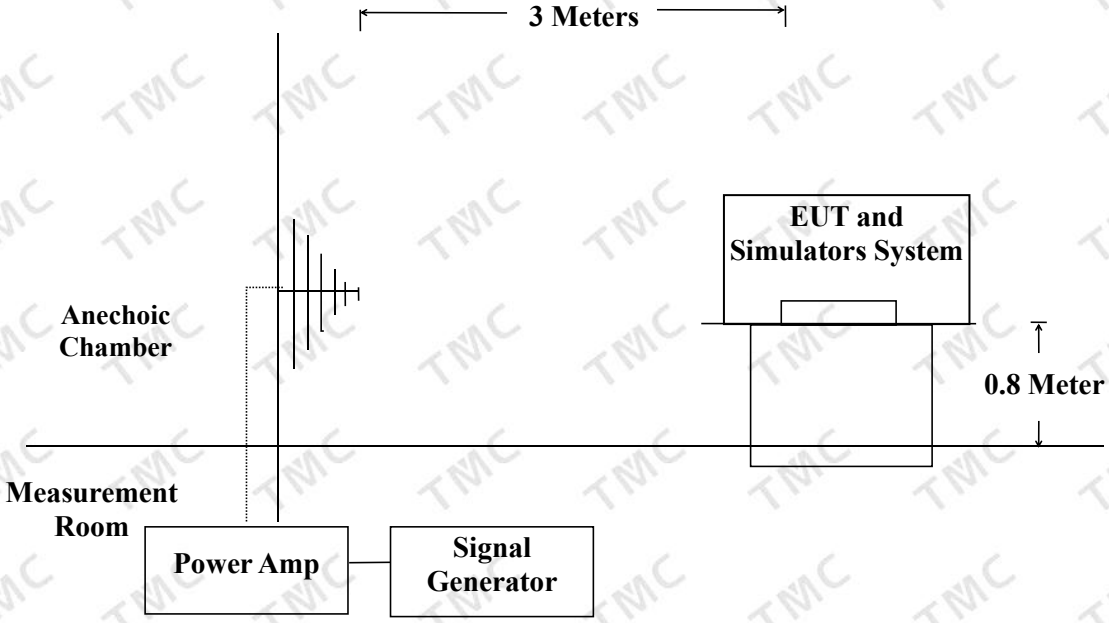

10.2. Test Standard

EN 55035:2017+A11:2020
Severity Level 2 at 3V / m

10.3. Severity Levels and Performance Criterion

10.3.1. Severity level

Level	Field Strength V/m
1.	1
2.	3
3.	10
X.	Special

10.3.2. Performance criterion: A

10.4. EUT Configuration on Test

The configuration of EUT are listed in Section 3.2

10.5. Operating Condition of EUT

Setup the EUT as shown in Section 10.1.. The operating condition of EUT is listed in section 3.3.

10.6. Test Procedure

The EUT and its simulators are placed on a turn table which is 0.8 meter above the ground. The EUT is set 3 meters away from the transmitting antenna which is mounted on an antenna tower. Both horizontal and vertical polarizations of the antenna are set on test. Each of the four sides of EUT must be faced this transmitting antenna and measured individually.
In order to judge the EUT performance, a CCD camera is used to monitor the EUT.
All the scanning conditions are as follows:

Condition of Test	Remark
1. Fielded Strength	3 V/m (Severity Level 2)
2. Radiated Signal	Modulated
3. Scanning Frequency	80 - 1000 MHz 1800MHz 2600MHz 3500MHz 5000MHz
4. Sweeping time of radiated	0.0015 decade/s
5. Dwell Time	1 Sec.

10.7. Test Results

PASS.

Please refer to the following page.

RF Field Strength Susceptibility Test Results

TMC Testing Services(Shenzhen) Co., Ltd.

Date: August 10, 2022

Applicant :	Shenzhen Filmbase Technology Co., Ltd.	Test Date :	June 14, 2022
EUT :	LED glass display（Photoelectric glass）	Temperature :	22 ℃
M/N :	P5	Humidity :	50 %
Power Supply :	AC 230V/50Hz	Test Mode :	ON
Test Engineer :	Jason	Frequency Range :	80 MHz to 1000 MHz
Modulation:	☑ AM ☐ Pulse ☐ none 1 KHz 80%		
Criterion : A			

	Frequency Rang : 80-1000	
Steps	1%	1%
	Horizontal	Vertical
Front	Pass	Pass
Right	Pass	Pass
Rear	Pass	Pass
Left	Pass	Pass

11. ELECTRICAL FAST TRANSIENT/BURST TEST

11.1. EFT Test Setup

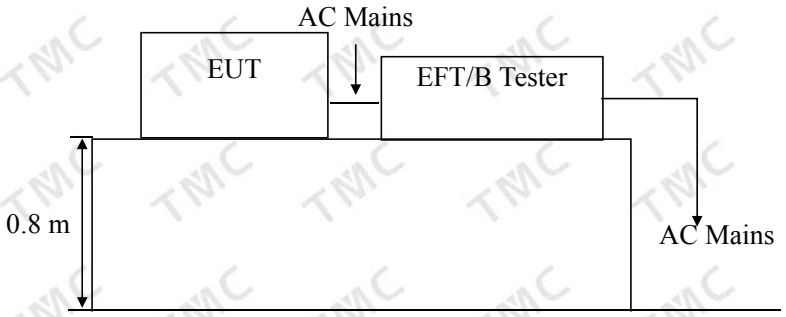

11.2. Test Standard

EN 55035:2017+A11:2020
Severity Level 2 at 1KV

11.3. Severity Levels and Performance Criterion

11.3.1. Severity level

Open Circuit Output Test Voltage ±10%		
Level	On Power Supply Lines	On I/O (Input/Output) Signal data and control lines
1	0.5 KV	0.25 KV
2	1 KV	0.5 KV
3	2 KV	1 KV
4	4 KV	2 KV
X	Special	Special

11.3.2. Performance criterion: B

11.4. EUT Configuration on Test

The configuration of EUT are listed in Section 3.2.

11.5. Operating Condition of EUT

Setup the EUT as shown in Section 11.1.. The operating condition of EUT is listed in section 3.3.

11.6. Test Procedure

The EUT is put on the table which is 0.8 meter high above the ground. This reference ground plane shall project beyond the EUT by at least 0.1m on all sides and the minimum distance between the EUT and all other conductive structure, except the ground plane beneath the EUT, shall be more than 0.5m.

11.6.1. For input and output AC power ports:

The EUT is connected to the power mains by using a coupling device which couples the EFT interference signal to AC power lines. Both polarities of the test voltage should be applied during compliance test and the duration of the test is 2 mins.

11.6.2. For signal lines and control lines ports:

It's necessary to test.

11.6.3. For DC output line ports:

It's unnecessary to test.

11.7. Test Results

PASS.

Please refer to the following page.

Electrical Fast Transient/Burst Test Results

TMC Testing Services(Shenzhen) Co., Ltd.

Date: August 10, 2022

Applicant :	Shenzhen Filmbase Technology Co., Ltd.	Test Date :	June 14, 2022
EUT :	LED glass display（Photoelectric glass）	Temperature :	22 ℃
M/N :	P5	Humidity :	50 %
Power Supply :	AC 230V/50Hz	Test Mode :	ON
Test Engineer :	Jason		
Inject Place : AC Mains			

Inject Line	Voltage KV	Inject Time(s)	Inject Method	Results	Inject Line	Voltage KV	Inject Time(s)	Inject Method	Results
L	±1	120	Direct	PASS					
N	±1	120	Direct	PASS					

12. SURGE TEST

12.1. Surge Test Setup

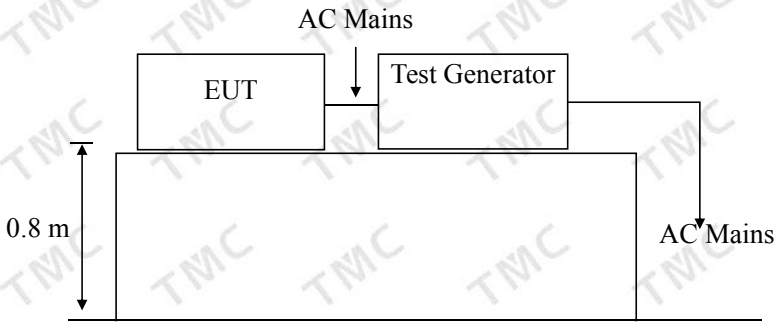

12.2. Test Standard

EN 55035:2017+A11:2020
Severity Level 2 for Line to Neutral at 1.0KV

12.3. Severity Levels and Performance Criterion

12.3.1. Severity level

Severity Level	Open-Circuit Test Voltage KV
1	0.5
2	1.0
3	2.0
4	4.0
*	Special

12.3.2. Performance criterion : B

12.4. EUT Configuration on Test

The configuration of EUT are listed in Section 3.2.

12.5. Operating Condition of EUT

12.5.1. Setup the EUT as shown in Section 12.1..

12.5.2. Turn on the power of all equipments.

12.5.3. Let the EUT work in test mode (ON) and test it.

12.6. Test Procedure

1) Setup the EUT and test generator as shown on Section 12.1.
2) For line to line coupling mode, provide a 0.5KV 1.2/50us voltage surge (at open-circuit condition) and 8/20us current surge to EUT selected points.
3) At least 5 positive and 5 negative (polarity) tests with a maximum 1/min repetition rate are conducted during test.
4) Different phase angles are done individually.
5) Record the EUT operating situation during compliance test and decide the EUT immunity criterion for above each test.

12.7. Test Results

PASS.

Please refer to the following page.

Surge Immunity Test Results

TMC Testing Services(Shenzhen) Co., Ltd.

Date: August 10, 2022

Applicant :	Shenzhen Filmbase Technology Co., Ltd.	Test Date :	June 14, 2022
EUT :	LED glass display（Photoelectric glass）	Temperature :	22 ℃
M/N :	P5	Humidity :	50 %
Power Supply :	AC 230V/50Hz	Test Mode :	ON
Test Engineer :	Jason		

Location	Polarity	Phase Angle	No of Pulse	Pulse Voltage (KV)	Result
L-N	+	0	5	1.0	PASS
	+	90	5	1.0	PASS
	+	180	5	1.0	PASS
	+	270	5	1.0	PASS
	-	0	5	1.0	PASS
	-	90	5	1.0	PASS
	-	180	5	1.0	PASS
	-	270	5	1.0	PASS

13. INJECTED CURRENTS SUSCEPTIBILITY TEST

13.1. Block Diagram of Test AC Mains Setup

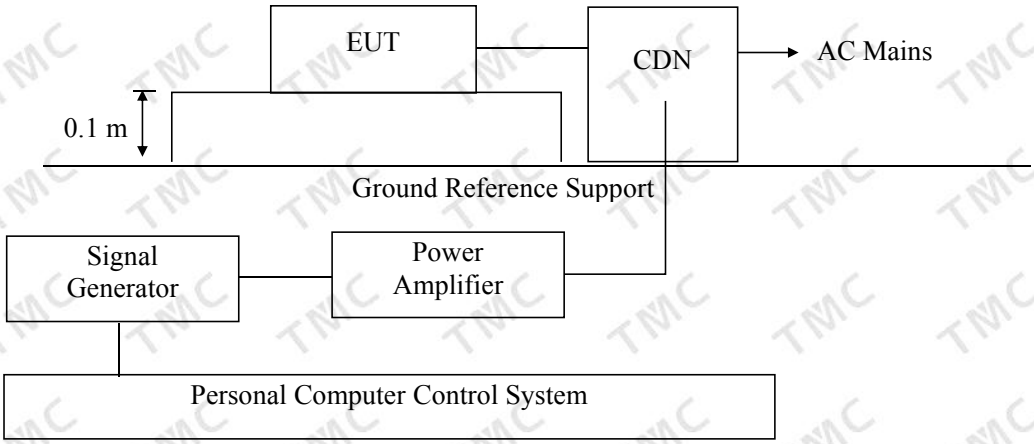

13.2. Test Standard

EN 55035:2017+A11:2020
Severity Level 2 at 3V (rms), 0.15MHz ~ 10MHz
Severity Level 2 and Level 1 at 3 V to 1V (rms), 10MHz ~ 30MHz
Severity Level 1 at 1V (rms), 30 MHz ~ 80MHz

13.3. Severity Levels and Performance Criterion

13.3.1. Severity level

Level	Field Strength V/m
1.	1
2.	3
3.	10
X	Special

13.3.2. Performance criterion: A

13.4. EUT Configuration on Test

The configuration of EUT are listed in Section 3.2

13.5. Operating Condition of EUT

Setup the EUT as shown in Section 13.1.. The operating condition of EUT are listed in section 3.3

13.6. Test Procedure

1) Set up the EUT, CDN and test generators as shown on Section 13.1.
2) Let the EUT work in test mode and test it.
3) The EUT are placed on an insulating support 0.8m high above a ground reference plane. CDN (coupling and decoupling device) is placed on the ground plane about 0.3m from EUT. Cables between CDN and EUT are as short as possible, and their height above the ground reference plane shall be between 30 and 50 mm (where possible).
4) The disturbance signal described below is injected to EUT through CDN.
5) The EUT operates within its operational mode(s) under intended climatic conditions after power on.
6) The frequency range is swept from 150KHz to 80MHz using 3V signal level, and with the disturbance signal 80% amplitude modulated with a 1KHz sine wave.
7) The rate of sweep shall not exceed $1.5*10^{-3}$decades/s. Where the frequency is swept incrementally, the step size shall not exceed 1% of the start and thereafter 1% of the preceding frequency value.
8) Recording the EUT operating situation during compliance testing and decide the EUT immunity criterion.

13.7. Test Results

PASS.

Please refer to the following page.

Injected Currents Susceptibility Test Results

TMC Testing Services(Shenzhen) Co., Ltd.

Date: August 10, 2022

Applicant :	Shenzhen Filmbase Technology Co., Ltd.	Test Date :	June 14, 2022
EUT :	LED glass display（Photoelectric glass）	Temperature :	22 ℃
M/N :	P5	Humidity :	50 %
Power Supply :	AC 230V/50Hz	Test Mode :	ON
Test Engineer :	Jason		

Frequency Range (MHz)	Injected Position	Strength	Criterion	Result
0.15 ~ 20	AC Line	3V(rms), Unmodulated	A	PASS
20 ~ 80	AC Line	3V(rms), Unmodulated	A	PASS

14. VOLTAGE DIPS AND INTERRUPTIONS TEST

14.1. Voltage Dips and Interruptions Test Setup

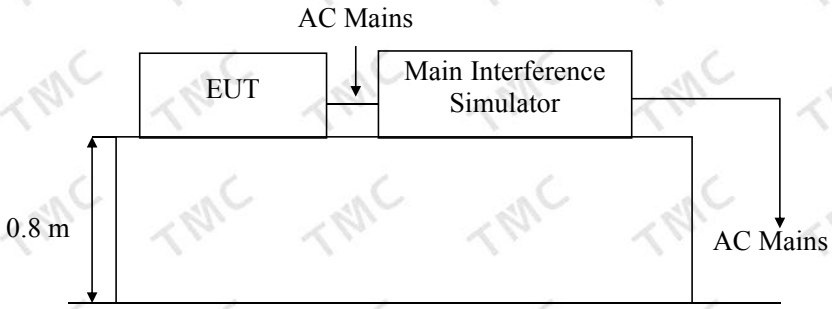

Remark: Combination wave generator and decoupling network are included in test generator.

14.2. Test Standard

EN 55035:2017+A11:2020

14.3. Severity Levels and Performance Criterion

14.3.1. Severity level

Test Level %UT	Voltage dip and short interruptions %UT	Duration (in period)
0	100	250p
40	60	5p
70	30	0.5p

14.3.2. Performance criterion: C & B

14.4. EUT Configuration on Test

The configuration of EUT is listed in Section 3.2.

14.5. Operating Condition of EUT

14.5.1. Setup the EUT as shown in Section 14.1.

14.5.2. Turn on the power of all equipments.

14.5.3. Let the EUT work in test mode (ON) and test it.

14.6. Test Procedure

1) Set up the EUT and test generator as shown on Section 14.1.
2) The interruption is introduced at selected phase angles with specified duration.
3) Record any degradation of performance.

14.7. Test Result

PASS.

Please refer to the following page.

Voltage Dips And Interruptions Test Results

TMC Testing Services(Shenzhen) Co., Ltd.

Date: August 10, 2022

Applicant :	Shenzhen Filmbase Technology Co., Ltd.	Test Date :	June 14, 2022
EUT :	LED glass display（Photoelectric glass）	Temperature :	22℃
M/N :	P5	Humidity :	50％
Power Supply :	AC 230V/50Hz	Test Mode :	ON
Test Engineer :	Jason		

Test Level % U_T	Voltage Dips & Short Interruptions % U_T	Duration (in period)	Phase Angle	Criterion	Result
0	100	250P	0° ~360°	C	PASS
40	60	5P	0° ~360°	C	PASS
70	30	0.5P	0° ~360°	B	PASS

APPENDIX I

Conducted Emission Measurement

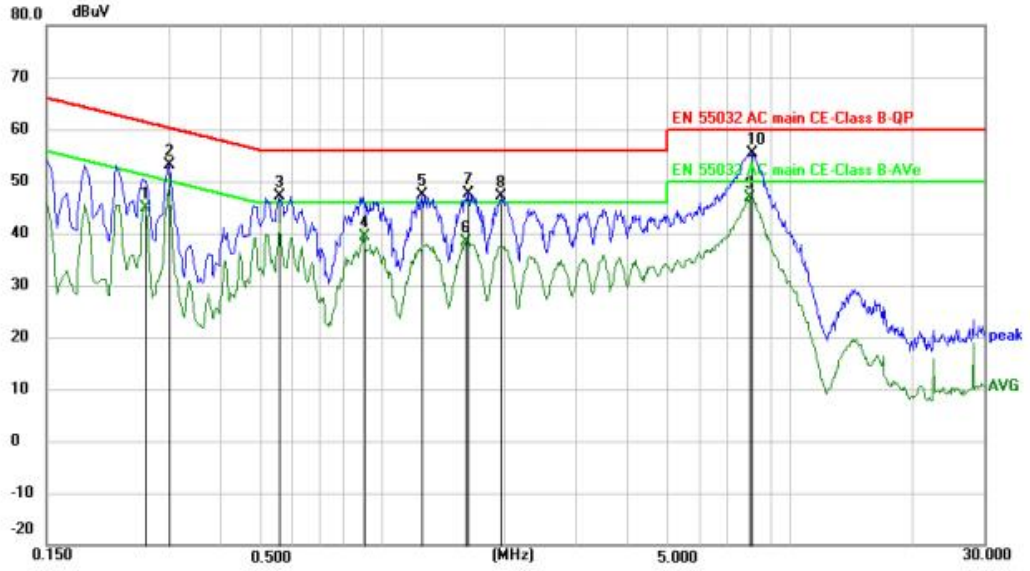

Site LAB | Phase: *L1* | Temperature: 26(C)
Limit: EN 55032 AC main CE-Class B-QP | Power: AC230V/50Hz | Humidity: 54 %RH

No.	Frequency (MHz)	Reading (dBuV)	Factor (dB)	Level (dBuV)	Limit (dBuV)	Margin (dB)	Detector	P/F	Remark
1	0.2625	34.74	10.03	44.77	51.35	-6.58	AVG	P	
2	0.2985	43.00	10.03	53.03	60.28	-7.25	peak	P	
3	0.5595	37.10	10.03	47.13	56.00	-8.87	peak	P	
4	0.9015	29.39	10.04	39.43	46.00	-6.57	AVG	P	
5	1.2615	37.23	10.04	47.27	56.00	-8.73	peak	P	
6	1.6080	28.24	10.05	38.29	46.00	-7.71	AVG	P	
7	1.6350	37.58	10.05	47.63	56.00	-8.37	peak	P	
8	1.9500	37.05	10.05	47.10	56.00	-8.90	peak	P	
9 *	8.0024	36.81	10.12	46.93	50.00	-3.07	AVG	P	
10	8.0745	45.25	10.12	55.37	60.00	-4.63	peak	P	

Conducted Emission Measurement

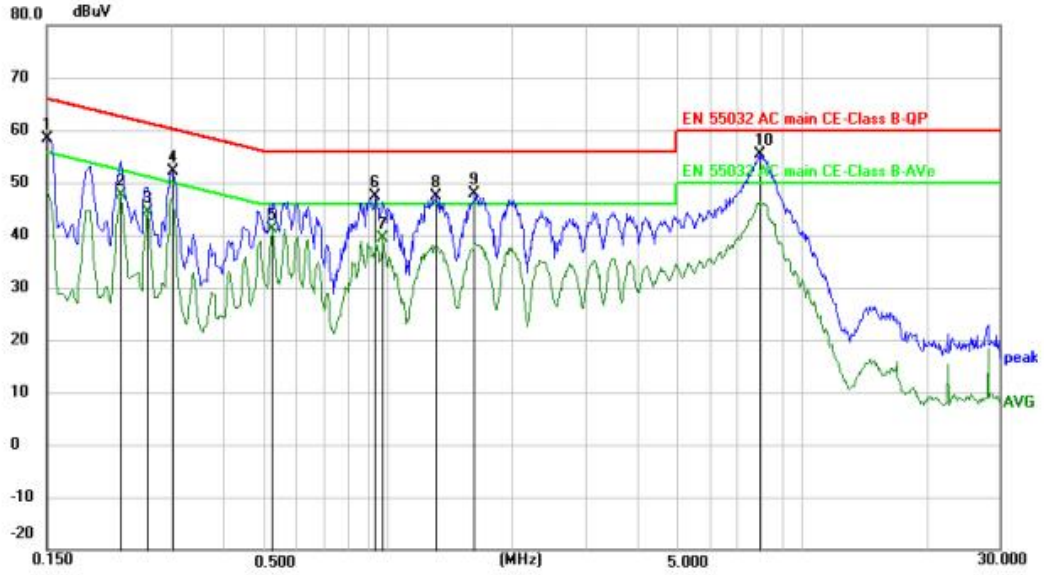

Site LAB | Phase: *N* | Temperature: 26(C)
Limit: EN 55032 AC main CE-Class B-QP | Power: AC230V/50Hz | Humidity: 54 %RH

No.	Frequency (MHz)	Reading (dBuV)	Factor (dB)	Level (dBuV)	Limit (dBuV)	Margin (dB)	Detector	P/F	Remark
1	0.1500	48.28	10.00	58.28	66.00	-7.72	peak	P	
2	0.2265	37.52	10.00	47.52	52.58	-5.06	AVG	P	
3	0.2625	34.34	10.00	44.34	51.35	-7.01	AVG	P	
4	0.3030	42.20	10.00	52.20	60.16	-7.96	peak	P	
5	0.5235	31.18	10.00	41.18	46.00	-4.82	AVG	P	
6	0.9375	37.47	10.01	47.48	56.00	-8.52	peak	P	
7	0.9780	29.41	10.01	39.42	46.00	-6.58	AVG	P	
8	1.3110	37.48	10.01	47.49	56.00	-8.51	peak	P	
9	1.6260	37.78	10.02	47.80	56.00	-8.20	peak	P	
10 *	7.9350	45.29	10.08	55.37	60.00	-4.63	peak	P	

APPENDIX Ⅱ

Radiated Emission Measurement

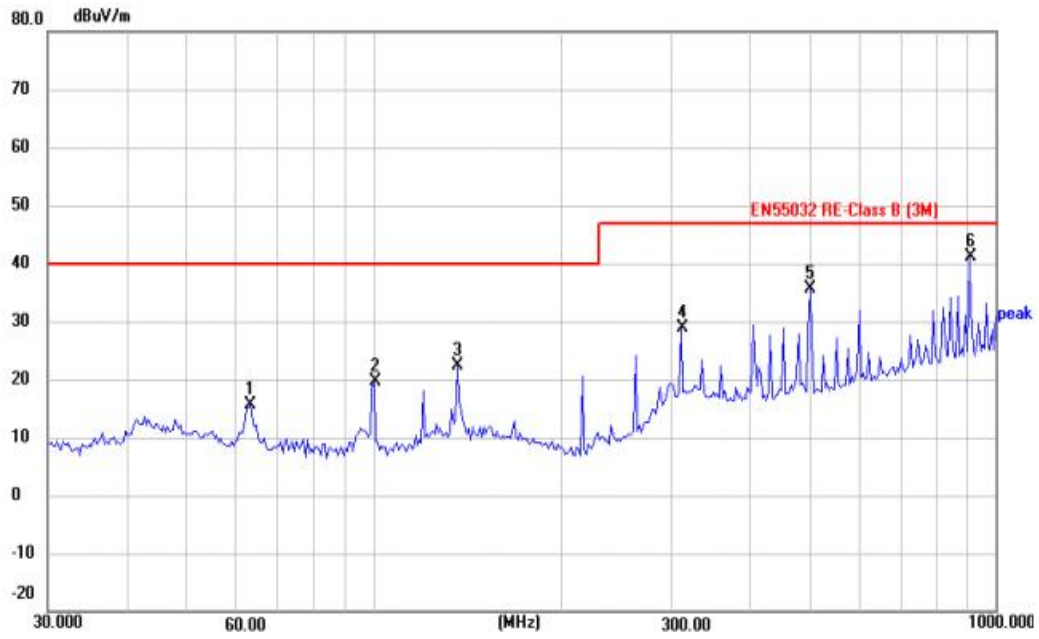

Site LAB | Polarization: ***Horizontal*** | Temperature: 26(C)

Limit: EN55032 RE-Class B (3M) | Power: AC230V/50Hz | Humidity: 54 %

No.	Frequency (MHz)	Reading (dBuV)	Factor (dB/m)	Level (dBuV/m)	Limit (dBuV/m)	Margin (dB)	Detector	Height (cm)	Azimuth (deg.)	P/F	Remark
1	63.5356	33.25	-17.61	15.64	40.00	-24.36	peak	100	360	P	
2	100.2286	39.60	-19.87	19.73	40.00	-20.27	peak	100	360	P	
3	136.4598	39.38	-16.92	22.46	40.00	-17.54	peak	100	360	P	
4	312.1794	44.24	-15.27	28.97	47.00	-18.03	peak	100	360	P	
5	502.9395	46.32	-10.60	35.72	47.00	-11.28	peak	100	360	P	
6 *	906.4824	44.92	-3.69	41.23	47.00	-5.77	peak	100	360	P	

Radiated Emission Measurement

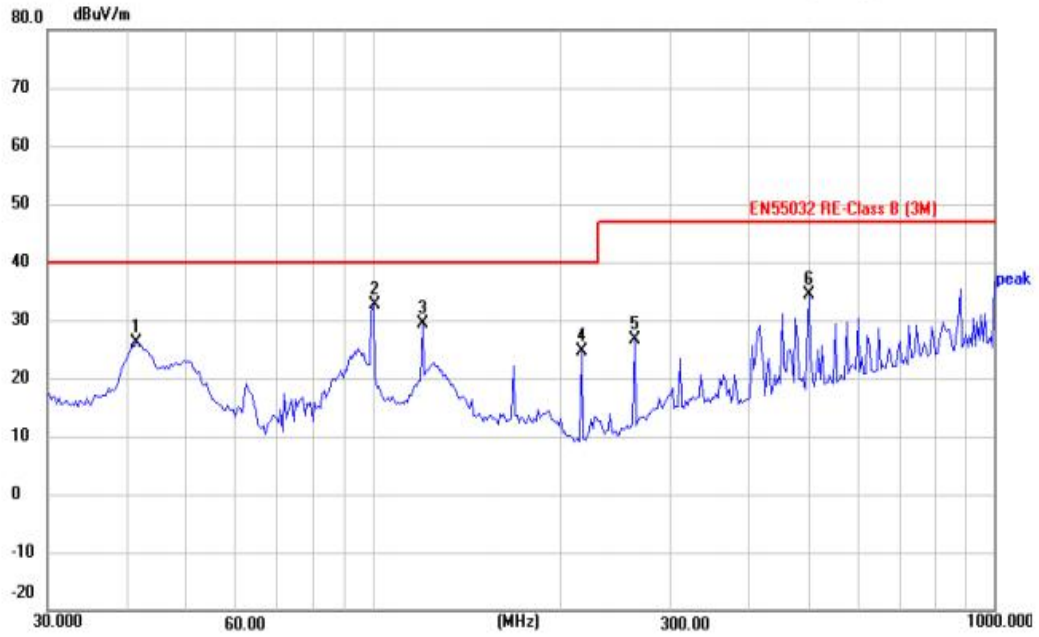

Site LAB | Polarization: *Vertical* | Temperature: 26(C)
Limit: EN55032 RE-Class B (3M) | Power: AC230V/50Hz | Humidity: 54 %

No.	Frequency (MHz)	Reading (dBuV)	Factor (dB/m)	Level (dBuV/m)	Limit (dBuV/m)	Margin (dB)	Detector	Height (cm)	Azimuth (deg.)	P/F	Remark
1	41.7129	42.42	-16.35	26.07	40.00	-13.93	peak	100	0	P	
2 *	100.2286	52.54	-19.87	32.67	40.00	-7.33	peak	100	0	P	
3	120.2766	47.15	-17.88	29.27	40.00	-10.73	peak	100	0	P	
4	216.7828	43.89	-19.34	24.55	40.00	-15.45	peak	100	0	P	
5	263.8190	43.51	-16.81	26.70	47.00	-20.30	peak	100	0	P	
6	502.9395	44.99	-10.60	34.39	47.00	-12.61	peak	100	0	P	

APPENDIX Ⅲ

Photo 1 General Appearance of the EUT

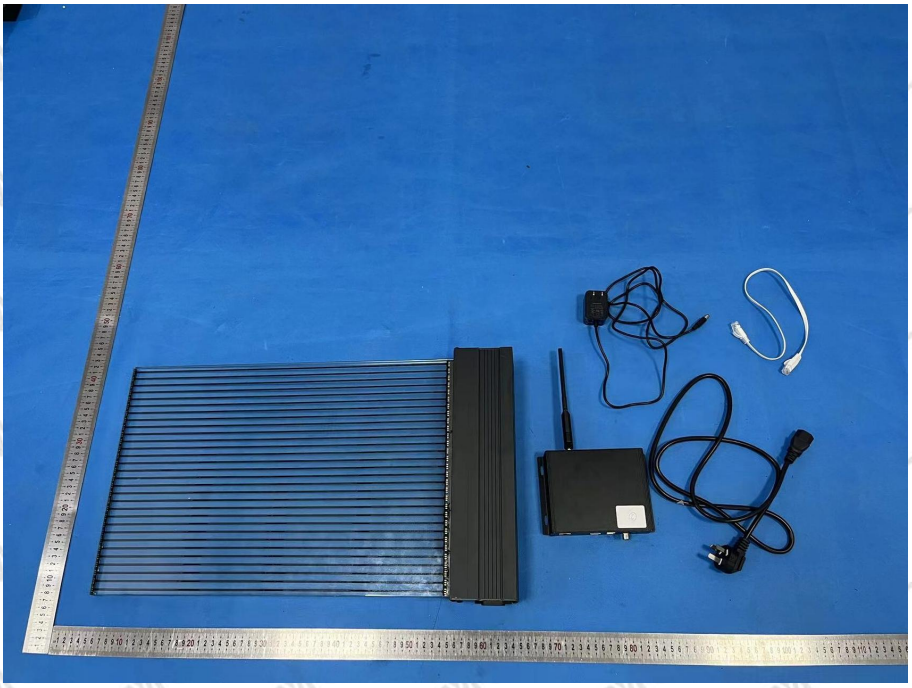

Photo 2 General Appearance of the EUT

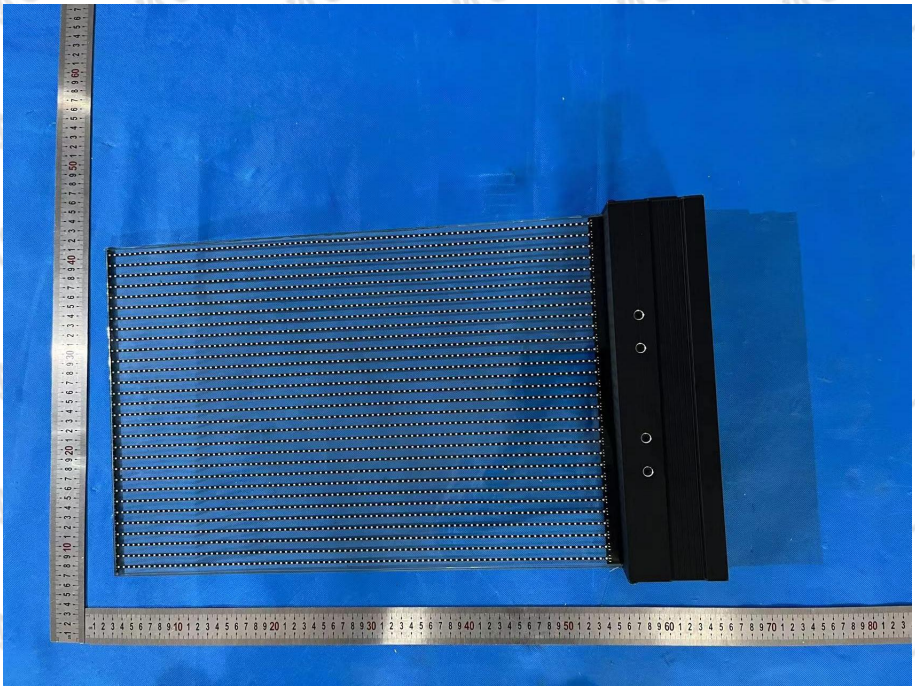

Photo 3 General Appearance of the EUT

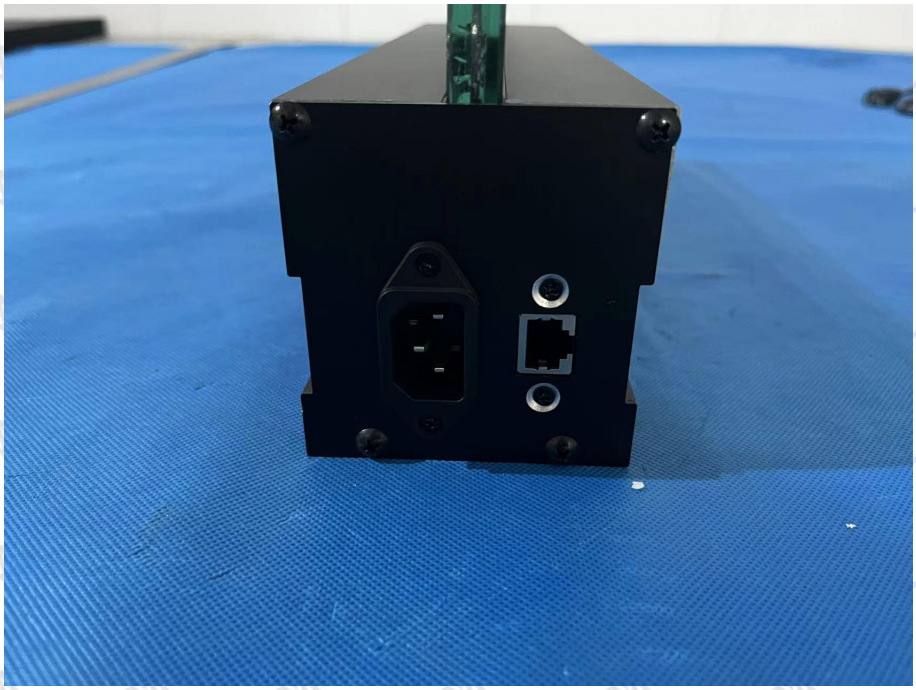

Photo 4 Radiated Emission Test

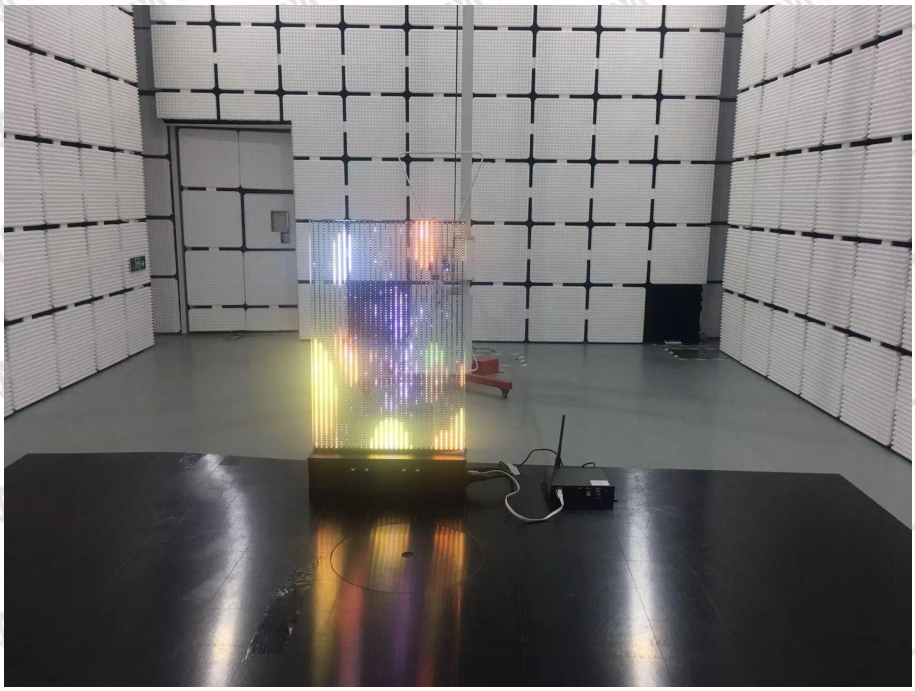

Photo 5 Power Line Conducted Emission Test

Photo 6 Electrostatic Discharge Test

End of report